EHO

Electromagnetic Hold-Open

This Electromagnetic Hold-Open device (EHO) allows for barrier-free access at single and double leaf fire doors. Doors will be held open under normal circumstances to ensure free flow of traffic, yet close securely in case of a fire or power failure.

Certificate
2812-CPR-AE5020

element

Product Features

	24V	48V
Hold-open angle	80˚-140˚	80˚-140˚
Adjustable release force	25Nm-78Nm	25Nm-78Nm
Operating voltage	24 VDC ± 15%	48 VDC ± 15%
Power input	1.4W	1.4W
Rated for continuous duty	100% ED	100% ED
EN 1155	V	
D.A.S. NF S 61-937-1	V	V

Options

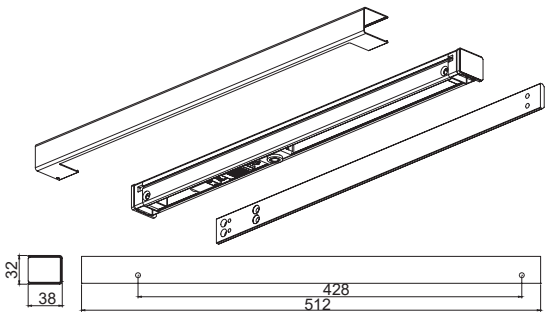

ZHT93-D001

- Electromagnetic Hold-Open device (EHO)
- With track arm: ZAB-D111 and rail: ZHAA-D001
- EN Certified

Installation

Door mount pull side (with T93P B type)

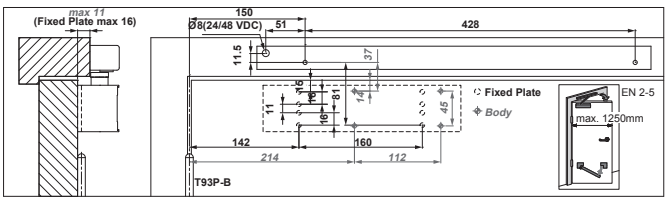
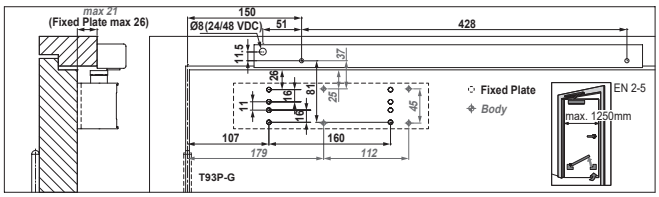
Door mount push side (with T93P G type)